(Note: 53 Cut Lengths is for webbing not bind and sewed.)

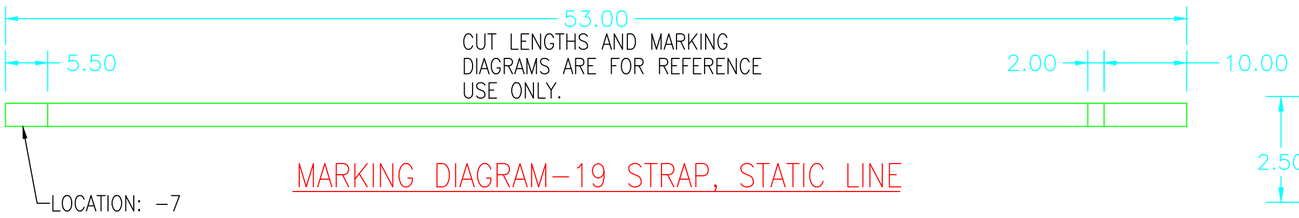

MARKING DIAGRAM-19 STRAP, STATIC LINE

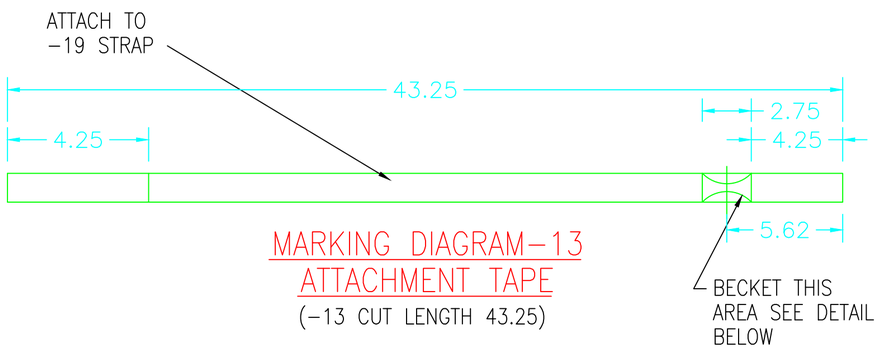

MARKING DIAGRAM-13
ATTACHMENT TAPE
(-13 CUT LENGTH 43.25)

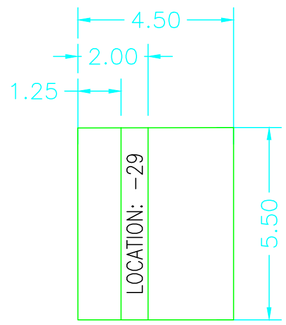

PATTERN-11 PANEL,
RETAINER

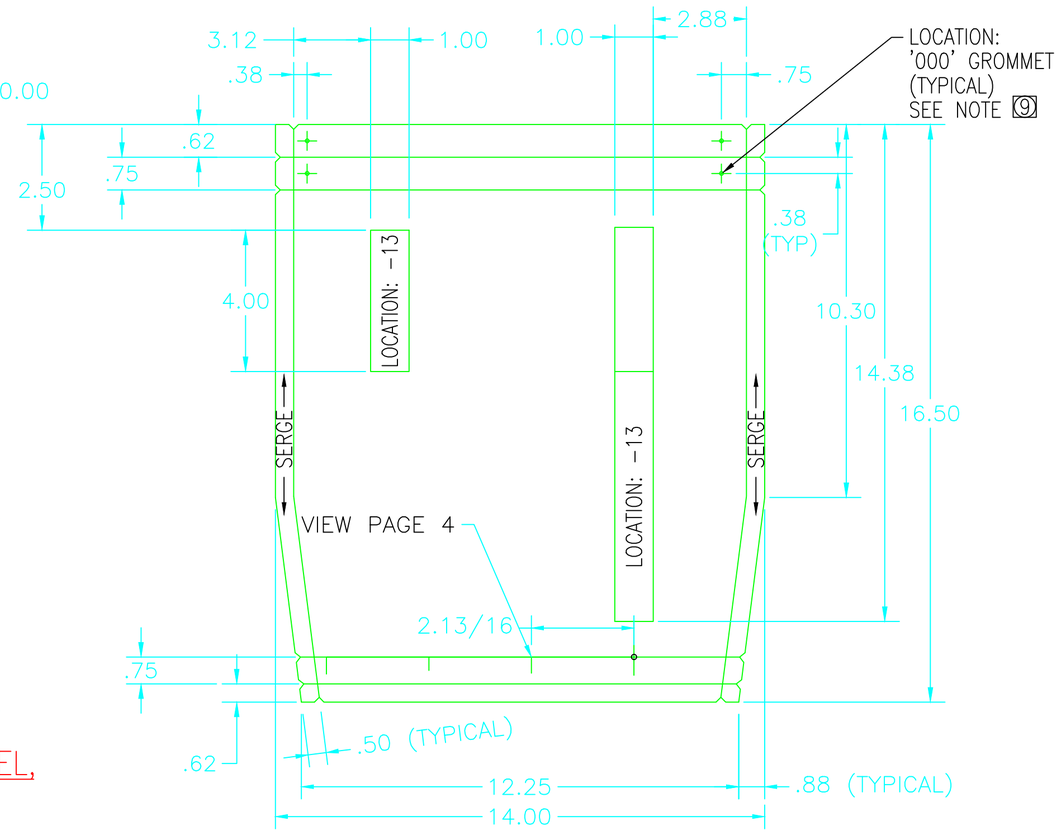

PATTERN-9 PANEL, DROGUE
DEPLOYMENT BAG

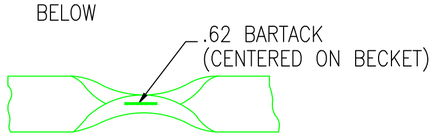

DETAIL: TUPPER LOOP

CONVERSION TABLE
INCH DECIMAL TO
INCH FRACTION

.12	=	1/8
.19	=	3/16
.25	=	1/4
.31	=	5/16
.38	=	3/8
.44	=	7/16
.50	=	1/2
.56	=	9/16
.62	=	5/8
.69	=	11/16
.75	=	3/4
.81	=	13/16
.88	=	7/8
.94	=	15/16

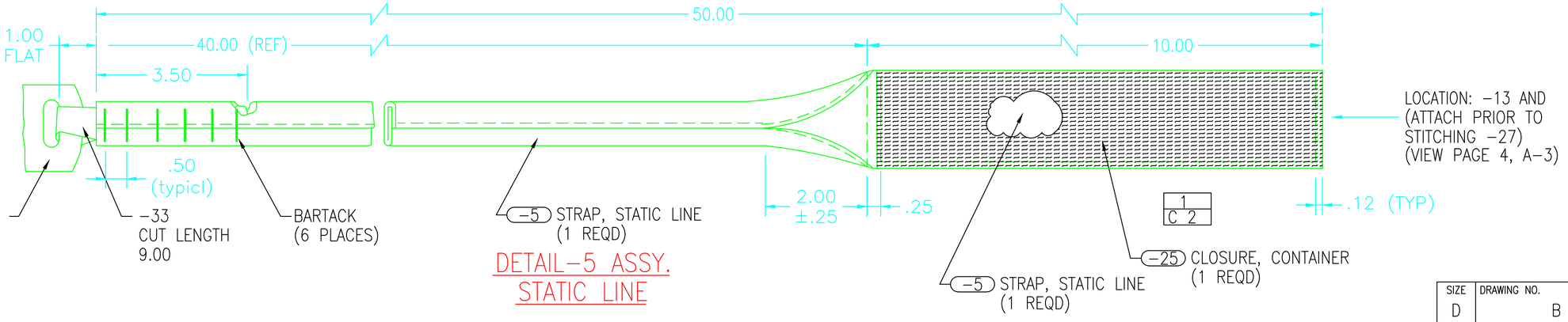

DETAIL-5 ASSY.
STATIC LINE

SIZE	DRAWING NO.	REV.
D	B 74001	C
SCALE NTS	FLH DRAFTING	SHEET 3 OF 4